Motor switches

Enclosed Motor Switches

Motor switches	108
Dimensions	117

Australian & New Zealand Contact: **FM Electrical Supplies Australia Pty Ltd**
Phone: +61 404 097 459 Email: sales@fmes.com.au **www.fmes.com.au**

Standard executions

	Rated permanent current I_u A	Max. switching capacity AC-3 kW/400 V 3~	IP 65 In metal enclosure Type	Ref. No.	Size of enclosure	IP 65 In plastic enclosure Type	Ref. No.	Size of enclosure
On-off switches, 3 poles	25	7,5	TAG 16	46 447	LG2/2	TAT 16	46 497	LT8/2
	45	15	TAG 32	46 441	LG44/3	TAT 32 1)	46 498	LT60/2
	63	22	TAG 50	46 468	LG48/2	–	–	–
	100	30	TAG 80	46 472	LG59/6	–	–	–
	150	55	VNAG 125	46 476	LG10/2 1)	–	–	–
Reversing switches	25	7,5	TWG 16	46 439	LG2/2	TWT 16	46 501	LT8/2
	45	15	TWG 32	46 442	LG44/3	TWT 32 1)	46 502	LT60/2
	63	22	TWG 50	302 417	LG48/2	–	–	–
	100	30	TWG 80	46 473	LG59/5	–	–	–
	150	55	VNWG 125	46 477	LG10/2 1)	–	–	–
Star-delta switches	25	7,5	TYG 16	46 449	LG44/1	TYT 16	46 505	LT8/2
	45	15	TYG 32	46 443	LG44/3	TYT 32 1)	46 506	LT60/2
	63	22	TYG 50	302 426	LG48/2	–	–	–
	100	30	TYG 80	46 474	LG59/5	–	–	–
	150	55	VNYG 125	46 478	LG10/2 1)	–	–	–
I-0-II (single winding)	25	7,5	TPIG 16	46 454	LG44/1	TPIT 16	46 509	LT8/2
	45	15	TPIG 32	46 444	LG44/3	TPIT 32 1)	46 527	LT60/2
Pole changing switches for 2 speeds, positions	25	7,5	TPIIG 16	46 462	LG44/1	TPIIT 16	46 532	LT8/2
	45	15	TPIIG 32	46 466	LG44/3	TPIIT 32 1)	46 537	LT60/2

1) Kind of protection IP 44

Dimensions page 117-118

Standard executions

Circuit diagram	Switch size	Rated permanent current I_u A	Switching capacity AC-3 kW/400V 3~	IP 65 In plastic enclosure with front plate **T** Type	Ref. No.	Size of enclosure	
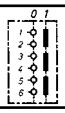	V2N	25	7,5	AT 25	143 004	T24/2	On-off switches, 3 poles
	V3N	32	11	AT 32	147 060	T26/3	
	VN 32	50	15	AT 50	148 713	T26/3	
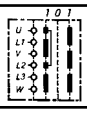	V2N	25	7,5	WT 25	143 005	T25/2	Reversing switches
	V3N	32	11	WT 32	147 068	T27/3	
	VN 32	50	15	WT 50	148 727	T27/3	
	V2N	25	7,5	YT 25	143 027	T25/2	Star-delta switches
	V3N	32	11	YT 32	147 103	T27/3	
	VN 32	50	15	YT 50	148 731	T27/3	
	V2N	25	7,5	PIT 25	143 028	T25/2	Pole changing switches for 2 speeds, positions 0-I-II (single winding)
	V3N	32	11	PIT 32	147 032	T27/3	
	VN 32	50	15	PIT 50	148 730	T27/3	
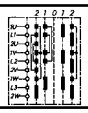	V1D	20	5,5	WP 20	138 468	T25/2	Pole-change-over switches for 2 speeds and 2 directions of rotation
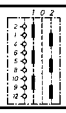	V2N	25	7,5	UT 25	143 026	T25/2	Change-over switches, 3 poles, with 0-position
	V3N	32	11	UT 32	147 000	T27/3	
	VN 32	50	15	UT 50	148 724	T27/3	
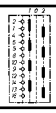	V2N	25	7,5	U4T 25	143 024	T25/2	Change-over switches, 3 poles, with 0-position
	V3N	32	11	U4T 32	147 014	T27/3	
	VN 32	50	15	U4T 50	148 743	T27/3	

Kind of protection of the switches only in vertical mounting position.

Dimensions page 118

Standard executions

Rated permanent current I_u A	Max. switching capacity AC-3 kW/400 V 3~	IP 65 In metal enclosure Type	Ref. No.	Size of enclosure	IP 65 In plastic enclosure Type	Ref. No.	Size of enclosure
Change-over switches for 2 circuits, 3 poles, with 0-position							
25	7,5	TUG 16	46 463	LG44/1	TUT 16	46 510	LT8/2
45	15	TUG 32	46 467	LG44/3	TUT 32 1)	46 511	LT60/2
63	22	TUG 50	302 423	LG48/2	–	–	–
100	30	TUG 80	46 475	LG59/5	–	–	–
150	55	VNUG 125	46 479	LG10/2	–	–	–
250	65	VNUG 200	155 395	LG14/3	–	–	–
400	200	VNUG 400	139 725	LG2/3	–	–	–
Change-over switches for 2 circuits, 4 poles, with 0-position							
25	7,5	TU4G 16	46 440	LG44/1	TU4T 16	46 517	LT8/2
45	15	TU4G 32	46 522	LG44/3	TU4T 32 1)	46 518	LT60/2
63	22	TU4G 50	302 430	LG48/2	–	–	–
100	30	TU4G 80	152 500	LG59/5	–	–	–
150	55	TU4G 125	154 420	LG10/2	–	–	–
250	65	TU4G 200	155 380	LG14/3	–	–	–
400	200	TU4G 400	139 730	LG2/3	–	–	–

1) Kind of protection IP 44

Kind of protection of the switches only in vertical mounting position.

Dimensions page 117-118

With CEE-plug

IP 65

Circuit diagram

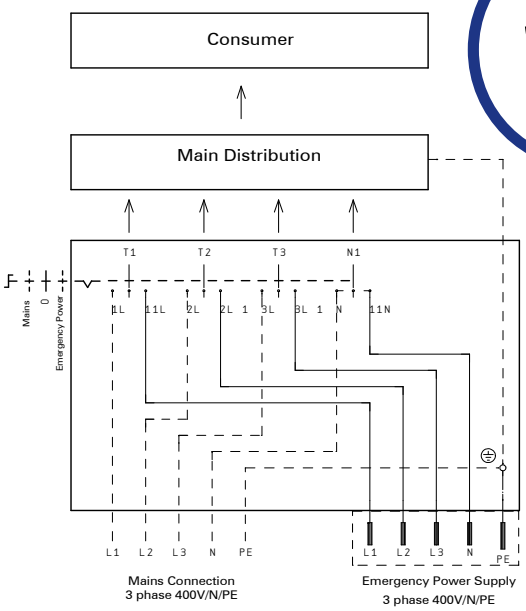

NEW

Suitable for farming, industry and private use
Dimensions page 122

Metal enclosure with waterproof CEE-plug	
Type	Ref. No.
CGWVNU4 516/6h	23 238
CGWVNU4 532/6h	23 237
CGWVNU4 563/6h	23 234

Aluminum sheet steel enclosure for harsh environments, for inside or outside use.

Technical data: AC-3 400 V 37 kW

Rated permanent current: I_u 100 A

Connectable cross sections at the switch insert: Single resp. multi-strand: 4 – 35 mm² wired ready for connection

Phase inverter (optional): Without opening the enclosure, the direction of rotation can be adapted.

Metal enclosure

IP 65

Circuit diagram	Switch size	Rated permanent current I_u A	Switching capacity (EN 60947-3) AC-3 kW/ 400 V 3~	In metal enclosure with interlocking (customer provided) Type	Ref. No.	Size of enclosure	Cable hole dimensions	max. connectable crosssection mm²
3-poles 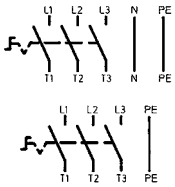	T 16	25	7,5	TAGK 16/3S	46 456	LG2/2	M 20	2,5
	T 32	45	15	TAGK 32/3S	46 445	LG44/3	M 32	6
	T 50	63	22	TAGK 50/3S	46 483	LG48/2	M 32	10
	T 80	100	30	TAGK 80/3S 1)	46 480	LG59/6	M 40	25
	VN 125	150	55	VNAGK 125/3S 1)	154 412	LG10/2	M 50	50
3 poles + 1 NO/1 NC contact 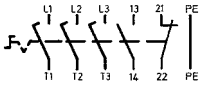	V3L	25	7,5	V3LAGK/3S	151 132	LG2/2	M 20	2,5
	VN 32	45	15	VNAGK 32/3S	148 701	LG44/3	M 32	6
	VN 50	63	22	VNAGK 50/3S	150 595	LG48/4	M 32/M 16	10
	VN 80	100	30	VNAGK 80/3S 1)	152 479	LG59/3	M 40/M 16	25
	VN 125	150	55	VNAGK 125/3S 1)	154 421	LG10/4	M 50/M 16	50
	NL400	400	200 3)	NL 33/HS 400-LB2/3-EHD-MSI 4)	139 728	LB2/3	Ø 75/ M 16	2 x 150
	NL630	630 2)	200 3)	NL 33/HS 630-LB2/3-KV-MSI 4)	139 868	LB2/3	Ø 75/ M 16	2 x 150
4 poles 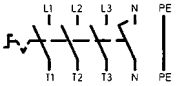	T 16	25	7,5	TA4GK 16/3S	46 453	LG2/2	M 20	2,5
	T 32	45	15	TA4GK 32/3S	46 450	LG44/3	M 32	6
	VN 50	63	22	VNA4GK50/3S	150 619	LG48/2	M 32	10
	T 80	100	30	TA4GK 80/3S 1)	46 531	LG59/6	M 40	25
	VN 125	150	55	VNA4GK 125/3S 1)	154 411	LG10/2	M 50	50
6 poles 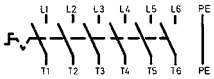	V3L	25	7,5	V3LA6GK/3S	137 665	LG44/2	M 20	2,5
	VN 32	45	15	VNA6GK 32/3S	148 698	LG44/3	M 32	6
	VN 50	63	22	VNA6GK 50/3S	137 671	LG48/2	M 32	10
	VN 80	100	30	VNA6GK 80/3S 1)	137 678	LG11/8	M 40	25
6 poles + 1 NO/1 NC contact 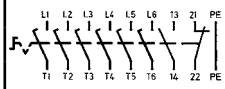	V3L	25	7,5	V3LA6GK/3S	137 661	LG44/6	M 20/M 16	2,5
	VN 32	45	15	VNA6GK 32/3S	148 721	LG48/4	M 32/M 16	6
	VN 50	63	22	VNA6GK 50/3S	137 669	LG48/4	M 32/M 16	10
	VN 80	100	30	VNA6GK 80/3S 1)	137 680	LG59/3	M 40/M 16	25
	VN 125	150	55	VNA6GK 125/3S 1)	137 699	LG10/4	M 50/M 16	50

1) Kind of protection IP 54

2) by max. cross-section connection

3) AC-23A/AC-23B

4) Sheet steel enclosure in RAL 7032

Dimensions page 39

. Other switching functions on request.

Dimensions page 117

With fuse base/interlocking device

IP 65

In metal enclosure with fuse base and interlocking for padlocks (padlocks by customer sites)

Rated permanent current I_u A	Max. switching capacity AC-3 kW/400 V 3~	Type	Size of enclosure	Ref. No.
32	11	V3LAGSNK/3S [5]	LG59/1	151 054
45	15	TAGSNK 32/3S [5]	LG59/4	46 514
63	22	VNAGSNK 50/3S [5]	LG59/2	150 588

On-off switches, 3 poles, lockable in 0-position

IP 65

in metal enclosure – with cylinder lock, handle operated

Rated permanent current I_u A	Max. switching capacity AC-3 kW/400 V 3~	Type	Size of enclosure	Ref. No.
32	11	V3LAG/ZSE	LG44/2	151 244
45	15	VNAG 32/ZSE	LG48/2	148 766
63	22	VNAG 50/ZSE	LG48/2	150 600

On-off switches, 3 poles, lockable in 0-position

IP 65

In plastic enclosure – key-operated (Lock Euro-Lock)

Rated permanent current I_u A	Max. switching capacity AC-3 kW/400 V 3~	Type	Size of enclosure	Ref. No.
25	5,5	D1 01/HS-T24/2-ZE-MXI	T24/2	3199 1144

On-off switch, 3 poles, key removable in 0-position

5) Fuse base D02, thread E18 (400 V)

Dimensions page 117, 119

Special switches

Rated permanent current I_u A	Max. switching capacity AC-3 kW/400 V 3~	IP 65	
		in metal enclosure – plastic knob on front side	
		Type	Ref. No.
25	5,5	D1A-G2/3-B-MSX	3199 1089
On-off switch, 3 poles, enclosure G2			

Rated permanent current I_u A	Max. switching capacity AC-3 kW/400 V 3~	IP 42	
		in plastic enclosure, for under table fixing	
		Type	Ref. No.
25	5,5	B1N A-UT37/3-B-MSX	137 896
On-off switch, 3 poles			

Rated permanent current I_u A	Max. switching capacity AC-3 kW/400 V 3~	IP 54	
		in plastic enclosure, with signal lamp	
		Typ Type	Best.-Nr. Ref. No.
25	7,5	V2N A/L-T24/2-B-MSI	143 268
On-off switch, 3 poles			

Kind of protection of the switches only in vertical mounting position.

Dimensions page 120

With CEE plugs and sockets

Rated permanent current I_u A	Max. switching capacity AC-3 kW/400 V 3~	IP 44 in metal enclosure with CEE plug		Max. Schaltleistung Max. switching capacity AC-3 kW/400 V 3~	IP 44 in plastic enclosure with CEE plug	
		Type	Ref. No.		Type	Ref. No.
16	7,5	CGTNA 516/6h	46 654	5,5	CGD1 A 516/6h-CT8/2-S-GSX	3199 1142
32	15	CGTNA 532/6h	46 657	–	–	–
On-off switches, 3 poles				On-off switch, 3 poles		
16	7,5	CGTNW 516/6h	46 655	5,5	CGD1 A 516P/6h-CT8/2-S-GSX	3199 1145
32	15	CGTNW 532/6h	46 658	–	–	–
Reversing switches, 3 poles				On-off switch with plug 16 A as phase-inverter		
16	7,5	CGTNY 516/6h	46 656	5,5	CGD1 W 516/6h-CT8/2-S-GSX	3199 1139
32	15	CGTNY 532/6h	46 659	–	–	–
Star-delta switches				Reversing switch, 3 poles		

5-poles:
3 P + N + ⏚
400 V, 50 Hz

Rated permanent current I_u A	Max. switching capacity AC-3 kW/400 V 3~	IP 44 Disconnectible CEE wall mounting socket, in plastic enclosure	
		Type	Ref. No.
16	5,5	CD1AT 516/6h	3199 0957
32	11	CV3NAT 532/6h	146 970
On-off switch, 3 poles			
16	5,5	CD1WT 516/6h	3199 0958
32	11	CV3NWT 532/6h	146 971
Reversing switches, 3 poles			

5-poles:
3 P + N + ⏚
400 V, 50 Hz

Dimensions page 121-122

With CEE plugs and sockets and undervoltage release
Emergency-off switches, with undervoltage release, according to VDE 0113/DIN EN 60204 part 1, coil tension 230 V, 50 Hz

The VDE specifications 0113/DIN EN 60204 part 1 have been taken in consideration for these devices. It is stated there in section 7.5 "Protection against automatic restart after mains failure and voltage return“:
"An automatical and unexpected restart of the machine should be avoided after voltage-return or switching on.“

Enclosure grey, Cover yellow, handle red

Rated permanent current I_u A	Max. switching capacity AC-3 kW/400 V 3~	IP 44 In plastic enclosure with CEE plug and undervoltage release		B Rated permanent current I_u A	Max. switching capacity AC-3 kW/400 V 3~	IP 44 In plastic enclosure with earth contact plug and undervoltage release	
		Type	Ref. No.			Type	Ref. No.
16	2,2	CGF2 01 316/6h-CT7/6-SE-GRX	158 102	16	2,2	SGS1 201-ST8/2-S-GRX	188 643
		Main switch/ Emergency-off switch 1-lockable in 0-position 3-polig poles: 2 P + ⏚				Emergency-off switch 2-polig poles: 2 P + ⏚	

Enclosure grey, Cover yellow, handle red

Rated permanent current I_u A	Max. switching capacity AC-3 kW/400 V 3~	IP 44 In plastic enclosure with CEE plug as phase-inverter and undervoltage release		Rated permanent current I_u A	Max. switching capacity AC-3 kW/400 V 3~	IP 44 In plastic enclosure with CEE plug and undervoltage release	
		Type	Ref. No.			Type	Ref. No.
16	7,5	CGS1 011 516P/ 6h-CT8/2-SE-GRX	188 623	16	7,5	CGS1 011 516/ 6h-CT8/2-S-GRX	188 651
		Main switch/Emergency-off switch 0-lockable in 0-position 5-poles: 3 P + N + ⏚ 400 V, 50 Hz				Emergency-off switch 5-poles: 3 P + N + ⏚ 230 V, 50 Hz	
				16	7,5	CGS1 013 516/ 6h-CT8/2-S-GRX	188 652
						Emergency-off switch 5-poles: 3 P + N + ⏚ 400 V, 50 Hz	

Kind of protection of the switches only in vertical mounting position.

Dimensions page 121

Metal enclosures

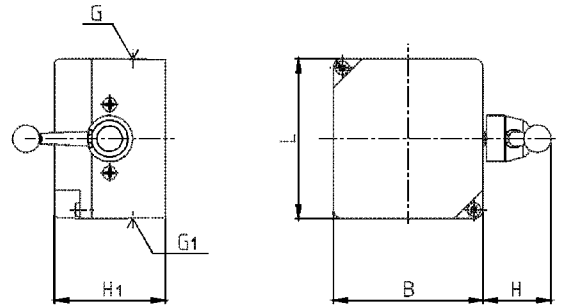

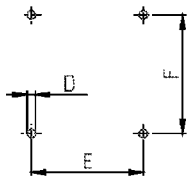

Panel drilling

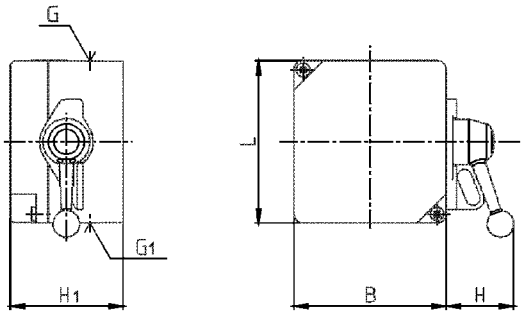

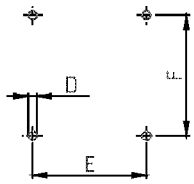

Panel drilling

Dimensions in mm

Size of enclosure	B	L	Base of enclosure	H_1	H	E	F	D	G	G_1
LG2/2	91	97	90 x 96	68	40	68 1)	72 1)	5,2	2 x Ø 20	2 x Ø 20
LG44/1	112	132	112 x 132	90	40	58	92	5,5	2 x Ø 25	2 x Ø 25
LG44/2	112	132	112 x 132	90	40	58	92	5,5	2 x Ø 20	2 x Ø 20
LG44/3	112	132	112 x 132	90	40	58	92	5,5	2 x Ø 32	2 x Ø 32
LG44/6	112	132	112 x 132	90	40	58	92	5,5	2 x Ø 20, 1 x Ø 16	2 x Ø 20, 1 x Ø 16
LG48/2	142	160	142 x 160	104	50	90	120	5,5	2 x Ø 32	2 x Ø 32
LG48/4	142	160	142 x 160	104	50	90	120	5,5	2 x Ø 32, 1 x Ø 16	2 x Ø 32, 1 x Ø 16
LG11/8	160	190	154 x 184	104	50	126	140	5,5	2 x M 40	2 x M 40
LG59/5	150	225	150 x 225	110	53	110	170	5,5	2 x M 40	2 x M 40
LG59/6	150	225	150 x 225	110	50	126	140	5,5	2 x M 40	2 x M 40
LG59/3	150	225	150 x 225	110	50	110	170	5,5	2 x M 40, 1 x M 16	2 x M 40, 1 x M 16
LG10/2	206	286	200 x 284	135	50	170	230	6,5	2 x M 50	2 x M 50
LG10/4	206	286	200 x 284	135	50	170	230	6,5	2 x M 50, 1 x M 16	2 x M 50, 1 x M 16

1) Two point mounting

Plastic enclosure

Dimensions in mm

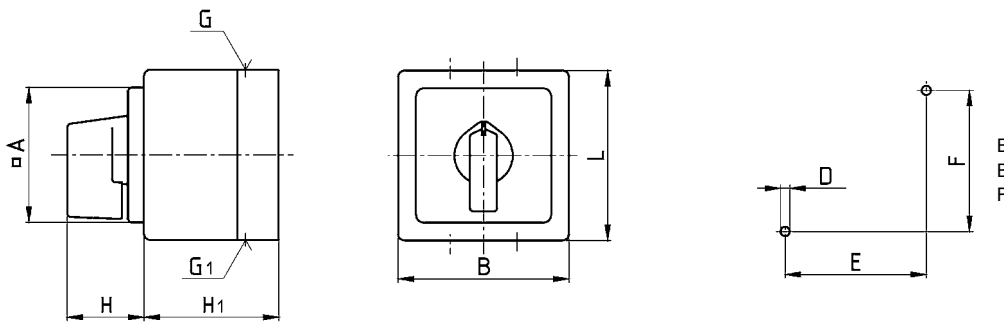

isogekapselt mit Frontplatte
in plastic enclosure with front plate

Gehäuse-Größe Size of enclosure	B	L	Gehäuse-Grundfläche Base of enclosure	H_1	□A	H	E	F	D	G	G_1
T24/2	82	82	82 x 82	67	65	34	68	68	4,5	2 x M 20	2 x M 20
T25/2	82	82	82 x 82	93	65	34	68	68	4,5	2 x M 20	2 x M 20
T26/3	96	96	96 x 96	77	72	34	82	82	4,5	2 x M 25	2 x M 25
T27/3	96	96	96 x 96	109	72	34	82	82	4,5	2 x M 25	2 x M 25

Dimensions in mm

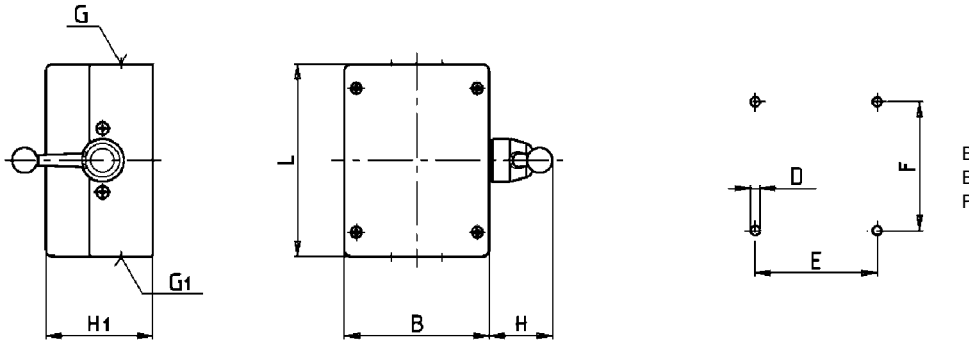

isogekapselt
in plastic enclosure

Gehäuse-Größe Size of enclosure	B	L	Gehäuse-Grundfläche Base of enclosure	H_1	H	E	F	D	G	G_1
LT8/2	91	121	91 x 121	68	40	68	72	4,5	1 x M 20, 1 x M25	1 x M 20, 1 x M25
LT60/2	175	125	175 x 125	87	53	101	116	4,5	2 x M 32	2 x M 32

Dimensions

Dimensions in mm

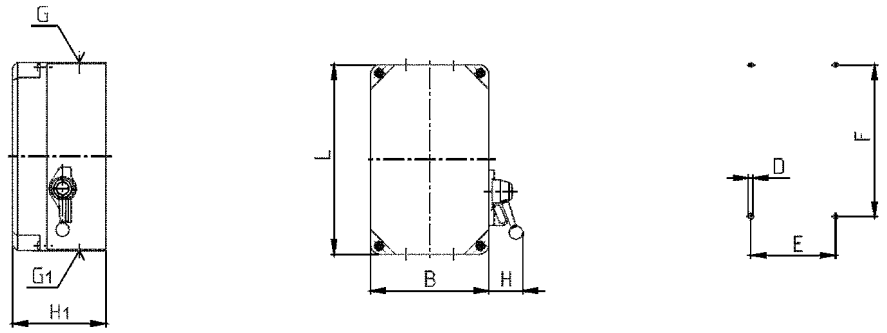

Bohrbild in der Befestigungswand
Panel drilling

gussgekapselt mit Sicherungssockel und Vorhängeschlossverriegelung
in metal enclosure with fuse base and interlocking for padlocks

Gehäuse-Größe Size of enclosure	B	L	Gehäuse-Grundfläche Base of enclosure	H_1	H	E	F	D	G	G_1
LG59/1	150	225	150 x 225	110	50	100	180	5,5	2 x M 25	2 x M 25
LG59/4	150	225	150 x 225	110	50	100	180	5,5	2 x M 32	2 x M 32
LG59/2	150	225	150 x 225	110	50	100	180	5,5	2x M32; 1 xM16	2x M32; 1 xM16

Dimensions in mm

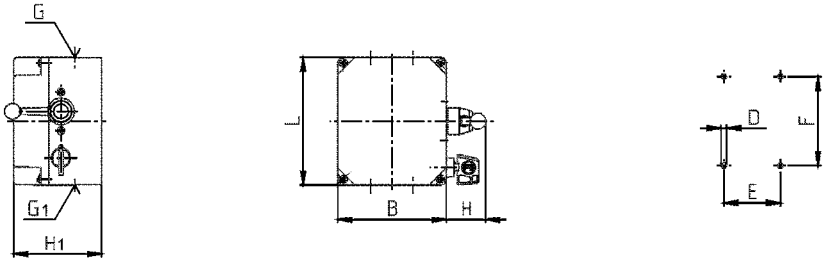

Bohrbild in der Befestigungswand
Panel drilling

gussgekapselt mit Zylinderschloss, griffbetätigt
in metal enclosure with cylinder lock, handle operated

Gehäuse-Größe Size of enclosure	B	L	Gehäuse-Grundfläche Base of enclosure	H_1	H	E	F	D	G	G_1
LG44/2	112	132	112 x 132	90	53	58	92	5,5	2 x Ø 20	2 x Ø 20
LG48/2	142	160	142 x 160	104	53	90	120	5,5	2 x Ø 32	2 x Ø 32

Dimensions in mm

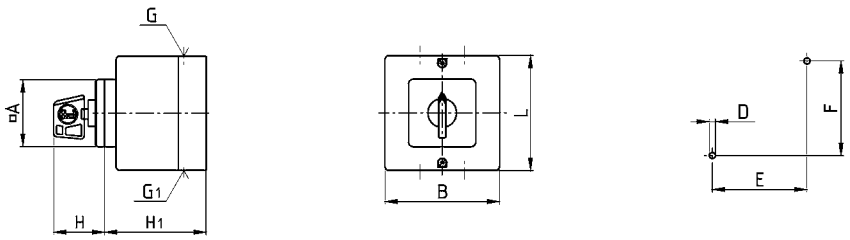

Bohrbild in der Befestigungswand
Panel drilling

isogekapselt mit Frontplatte
in plastic enclosure with front plate

Gehäuse-Größe Size of enclosure	B	L	Gehäuse-Grundfläche Base of enclosure	H_1	□A	H	E	F	D	G	G_1
T24/2	82	82	82 x 82	67	48	37	68	68	4,5	2 x M 20	2 x M 20

Dimensions

Dimensions in mm

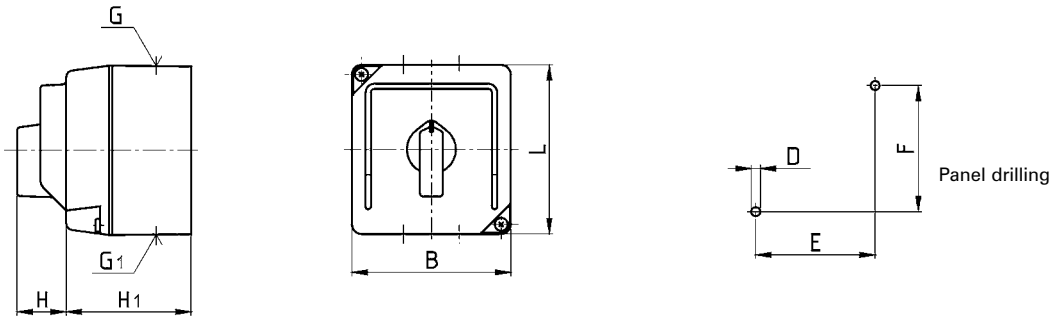

in metal enclosure – plastic knob on front side

Size of enclosure	B	L	Base of enclosure	H_1	H	E	F	D	G	G_1
G2/3	91	97	90 x 96	72	28	68	72	5,5	2 x Ø 20	2 x Ø 20

Dimensions in mm

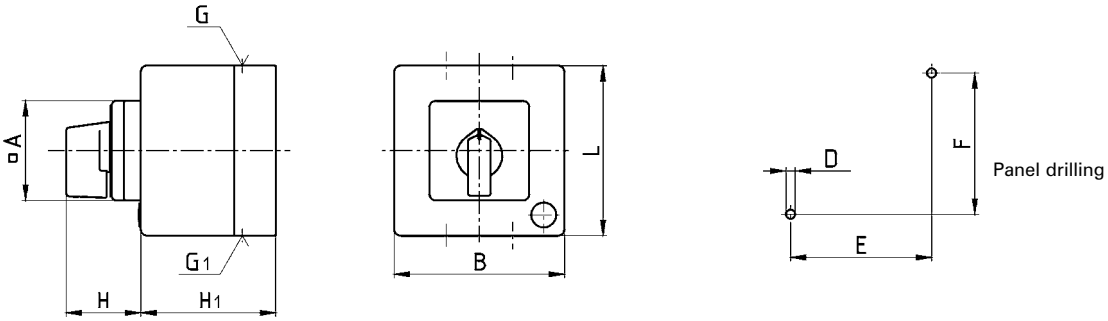

in plastic enclosure with front plate

Size of enclosure	B	L	Base of enclosure	H_1	□A	H	E	F	D	G	G_1
T24/2	82	82	82 x 82	67	48	34	68	68	4,5	2 x M 20	2 x M 20

Dimensions in mm

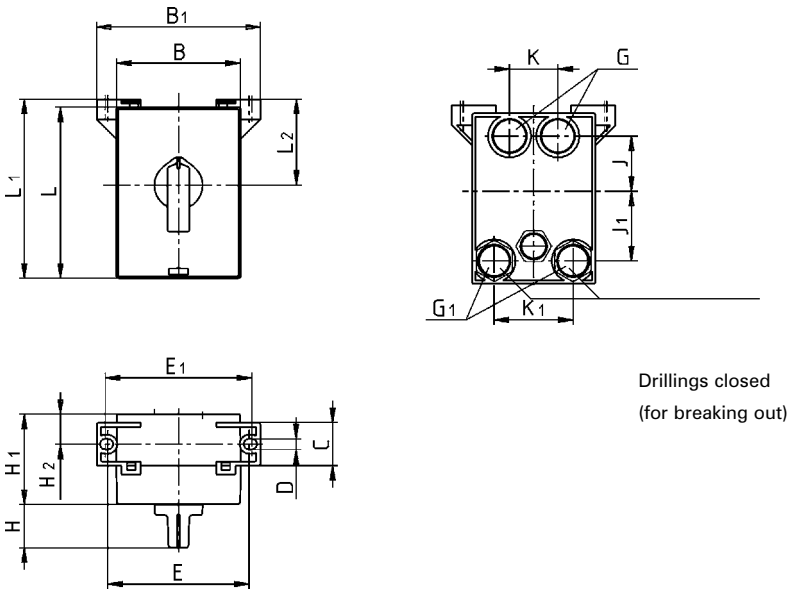

in plastic enclosure, for under table fixing

Size of enclosure	B	L	Base of enclosure	H_1	H	H_2	B_1	L_1	L_2	E	E_1	D	C	K	K_1	J	J_1	G	G_1
UT37/3	72	100	72 x 100	53	17	18	95	104	50	82	85	6,2	25	28	46	32	40	Ø16	Ø16

Dimensions

Dimensions in mm

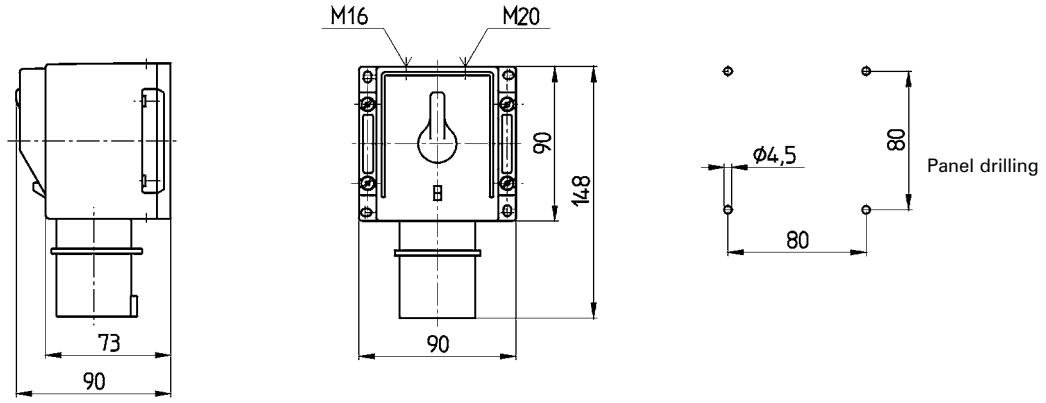

in plastic enclosure with CEE plug 316, size of enclosure CT7/6

Types CGF2 01 316/6h-CT7/6-S-GRX

Dimensions in mm

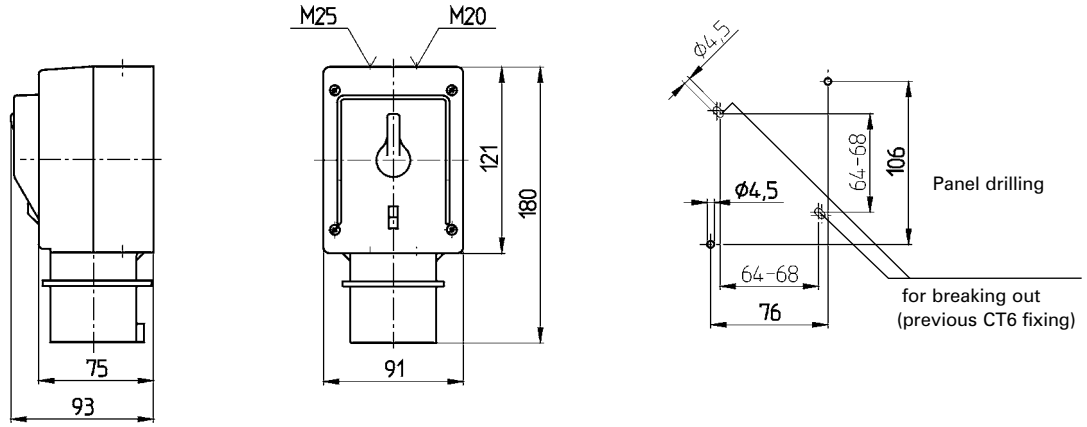

in plastic enclosure with CEE plug 516, size of enclosure CT8/2

Types CGD1 A 516/6h-CT8/2-S-GSX, CGD1 A 516P/6h-CT8/2-S-GRX, CGD1 W 516/6h-CT8/2-S-GSX, CGS1 011 516P/6h-CT8/2-SE-GRX, CGS1 011 516/6h-CT8/2-S-GRX

Dimensions in mm

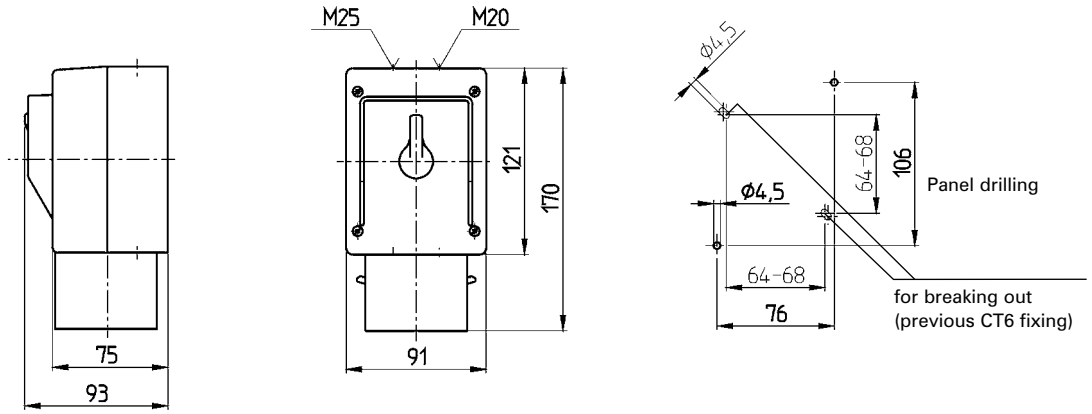

in plastic enclosure with earth contact plug, size of enclosure ST8/2

Typ SGS1 201-ST8/2-S-GRX

Dimensions

Dimensions in mm

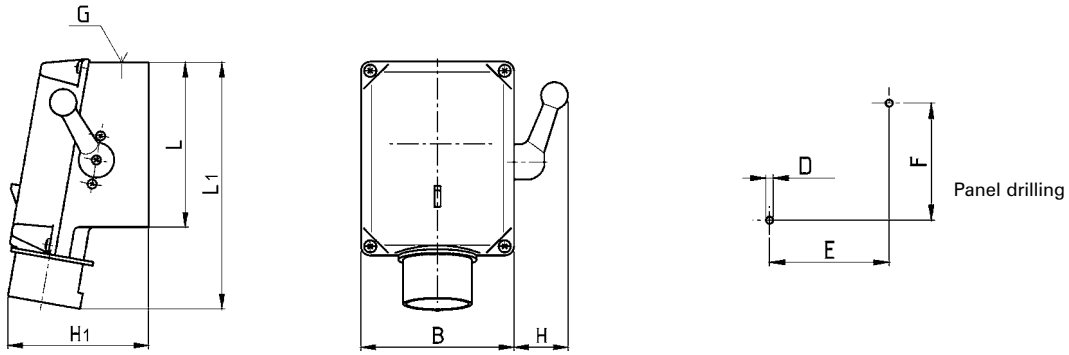

in metal enclosure with CEE plug

Type	B	L	Base of enclosure	L_1	H_1	H	E	F	D	G
CGTA 516/6h, CGTW 516/6h, CGTY 516/6h	93	91	88 x 88	155	89	38	68	53	5	2 x M 20
CGTA 532/6h, CGTW 532/6h, CGTY 532/6h	124	135	120 x 135	214	116	53	93	91	5,5	2 x M 25

Dimensions in mm

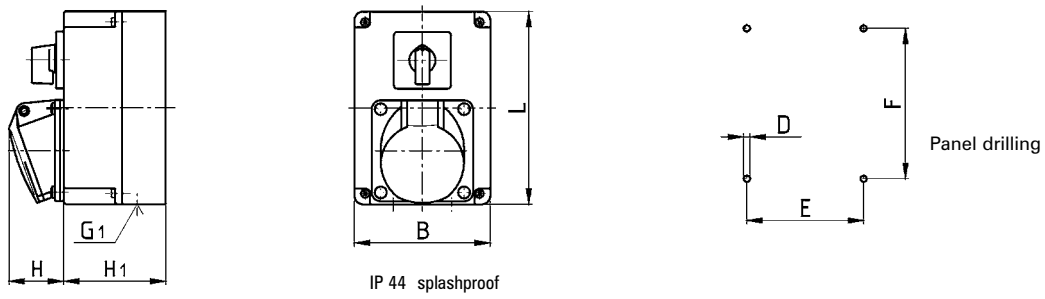

Disconnectible CEE wall mounting socket, in pastic enclosure

Type	B	L	Base of enclosure	H_1	H	E	F	D	G
CD1AT 516/6h, CD1WT 516/6h	114	162	114 x 162	86	46	98	126	5,3	2 x M 20
CV3NAT 532/6h, CV3NWT 532/6h	114	162	114 x 162	86	49	98	126	5,3	2 x M 25

Dimensions in mm

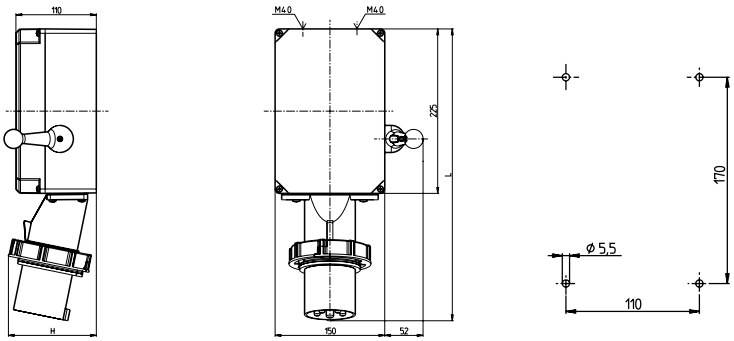

Type	L	H
CGWVNU4 516/6h	329	136
CGWVNU4 532/6h	346	153
CGWVNU4 563/6h	400	120

Australian & New Zealand Contact: **FM Electrical Supplies Australia Pty Ltd**
Phone: +61 404 097 459 Email: sales@fmes.com.au **www.fmes.com.au**